RECOM

MONO CRYSTALLINE DUAL GLASS BIFACIAL MODULE

390 / 395 Watts

Black Panther

TIER 1 BLOOMBERG NEW ENERGY FINANCE

Overview

Through the use of P-Type high efficiency mono cells and dual-glass structure, the overall performance of the BiFacial module increases under optimal conditions up to 30% more than an equivalent monofacial module. A fully certified, premium quality and high efficiency module made with A Grade materials.

Guaranteed mechanical resistance to severe weather conditions

5W

Guaranteed Positive Tolerance up to 5W

EL

100 % electro-luminescence tested

Key Benefits

- Certified by Independent Engineering Bodies
- Product Liability Insurance
- Engineered in EU
- 15 Years Limited Product Warranty
- Anti-PID Technology
- Low Carbon Footprint

Tests, Certifications and Warranties

Standard Tests	IEC 61215, IEC 61730
Factory Quality Tests	ISO 9001: 2008, ISO 14001: 2004
Certifications	Fire Rating Type 1, conformity to CE, PV CYCLE
Insurance	Product liability insurance provided by Allianz
Surface Maximum Load Capacity	Above 5400Pa
Positive Tolerance	Guaranteed positive tolerance of up to 5W
Warranties	• 15-year limited product warranty • 15-year manufacturer warranty on 90.3% of the nominal performance • 30-year transferable linear power output warranty

Linear Performance Warranty

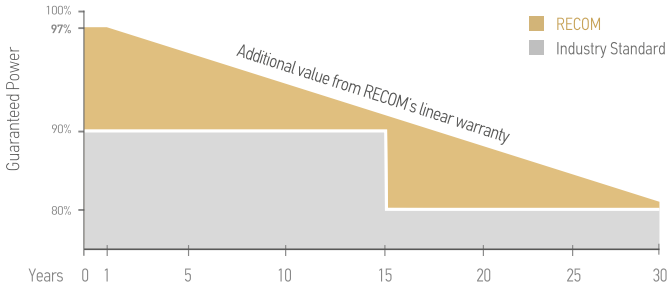

First Year Output	≥ 97%	2-24 Year Decline	≤ 0.65%	30 Year Output	≥ 80.0%

MONO CRYSTALLINE DUAL GLASS BIFACIAL MODULE

RCM-xxx-6BMA (xxx=390-395)

Electrical Characteristics

Rated Power	390W	395W
Power Tolerance	0~+5W	0~+5W
Maximum Power Voltage (Vmp)	40.61V	40.86V
Maximum Power Current (Imp)	9.62A	9.68A
Open Circuit Voltage (Voc)	49.29V	49.60V
Short Circuit Current (Isc)	10.09A	10.15A
Module Efficiency	19.05%	19.31%
Maximum Series Fuse	20A	20A
Maximum System Voltage	1.500 VDC	

Tested at Standard Test Conditions. Measurement tolerances: ± 3%

Bi-facial Output - Backside Power Gain

15%	Power Output	449W	454W
	Module Efficiency	21.93%	22.22%
20%	Power Output	468W	474W
	Module Efficiency	22.89%	23.18%
25%	Power Output	488W	494W
	Module Efficiency	23.85%	24.15%
30%	Power Output	507W	514W
	Module Efficiency	24.80%	25.12%

Mechanical Data

Dimensions	2036mm x 1004m x 40mm
Weight	28.0 Kg
Cell Type	Mono PERC
Front Glass	2.0 mm Tempered & Low Iron Glass
Cable cross - section & length	4 mm^2 & 500mm
Output Cables	TUV (2Pfg1169:2007), UL 4703, UL44 4.0 mm^2 (0.006 in^2), MC4 type connectors

I-V Curve

The module relative power loss at low light irradiance of 200W/m^2 is less than 3%.

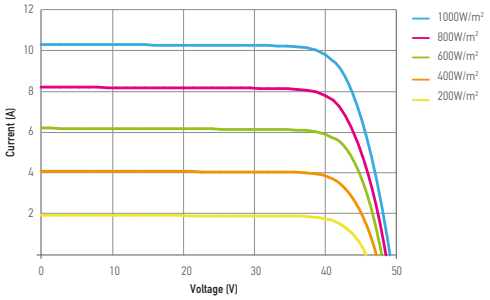

Dimensions

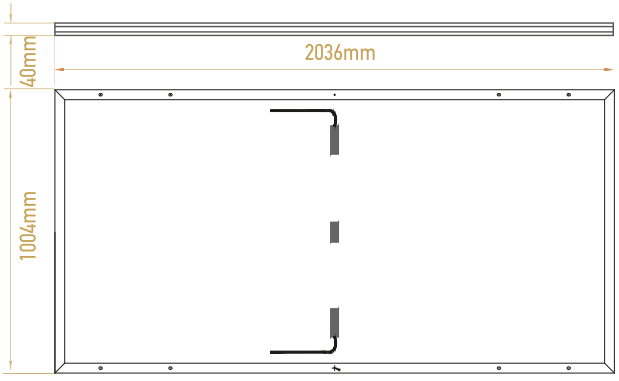

Temperature Characteristics

Pmax Temperature Coefficient	-0.37% / °C
Voc Temperature Coefficient	-0.27% / °C
Isc Temperature Coefficient	+0.05 % / °C
Operating Temperature	-40~+85 °C
Nominal Operating Cell Temperature (NOCT)	46 ± 2 °C

Packing Configuration

Container	40'HC
Pieces per Pallet	25
Pallets per Container	22
Pieces per Container	550

RECOM assumes no liability or responsibility for any typographical error, layout error, misinformation, any other error, omission, contained herein.

recom-solar.com

The specification and key features described in this datasheet may deviate slightly and are not guaranteed. Due to on-going innovation, research and product enhancement, RECOM Solar reserves the right to make any adjustment to the information described herein at any time without notice. Please always obtain the most recent version of the datasheet which shall be duly incorporated into the binding contract made by the parties governing all transactions related to the purchase and sale of the products described herein. Please read the safety and installation instructions before using the modules.

© Copyright 2020. RECOM

**Release RCM-xxx-6BMA(xxx=390-395)-5-G1-SG-15V-001-2020-02-vers 1.0